Smart Health Monitoring System

Course: Embedded Systems
Semester: 2026
Institution: Al-Razi University
Submission Date: January 26, 2026

Members: **Balqees Adel Jamil – 15**

---

2. Abstract

This project presents a real-time health monitoring system based on the Arduino Nano micro-controller. The system measures two primary vital signs:
body temperature and heart rate. The temperature is detected using the MLX90614 Infrared Temperature Senor, which enables non-contact measurement, while the heart rate is measured using a Pulse Sensor (Heart Rate Sensor).
The system processes the collected data using smoothing and filtering techniques to reduce noise and ensure stable readings. A peak detection algorithm is implemented to calculate the heart rate in beats per minute (BPM). Additionally, the system classifies both temperature and heart rate into three categories:

- normal
- low
- high

based on predefined thresholds.

The results are displayed in real-time on a 16x2 LCD using the I2C communication protocol, which reduces wiring complexity. This system provides a low-cost, efficient, and expandable solution for basic health monitoring applications suitable for educational and prototype purposes.

3.Introduction

3.1 Background and Motivation

Health monitoring systems are increasingly important in modern healthcare due to the need for continuous and non-invasive monitoring of vital signs. This project aims to design a simple yet efficient system that can measure temperature and heart rate using affordable components.
The motivation behind this project is to gain practical experience in embedded systems while developing a useful real-world application.

3.2 Problem Statement

Traditional health monitoring devices can be expensive and complex. This project addresses the need for a low-cost, simple, and real-time system capable of monitoring vital signs and displaying them clearly to the user.

3.3 Project Objectives

- Measure body temperature in real-time using a non-contact sensor
- Measure heart rate (BPM) accurately using a pulse sensor
- Display readings clearly on an LCD screen
- Implement filtering to stabilize sensor readings
- Classify readings into Normal, Low, and High

3.4 Scope and Limitations

The system focuses on basic vital sign monitoring and is not intended for medical diagnosis. It operates as a prototype using limited processing power of the Arduino Nano and may be affected by noise and environmental conditions.

4.System Overview

4.1 High-Level Description

The system collects data from temperature and heart rate sensors, processes the signals using Arduino Nano, and displays the results on an LCD screen in real time.

4.2 Functional Description

Sensing: Temperature and pulse detection
Processing: Signal filtering and BPM calculation
Output: Display on LCD
Communication: I2C protocol

4.3 Use-Case Scenario

When the system is powered on, sensors start reading data continuously. The Arduino processes the data and updates the LCD display showing temperature and heart rate along with their status (Normal, High, Low).

5.Hardware Design

5.1 Components List

Quantity	Specification	Component
1	ATmega328P	Arduino Nano
1	Infrared Temperature Sensor	MLX90614
1	Heart Rate Sensor	Pulse Sensor
1	0x27 Address	LCD 16*2 (12C)
Several	__	Jumper Wires

5.2 Component Justification

The selected components are low-cost, easy to use, and widely supported. The MLX90614 provides accurate non-contact temperature readings, while the pulse sensor allows real-time heart rate detection. The I2C LCD reduces wiring complexity.

5.3 Circuit Diagram

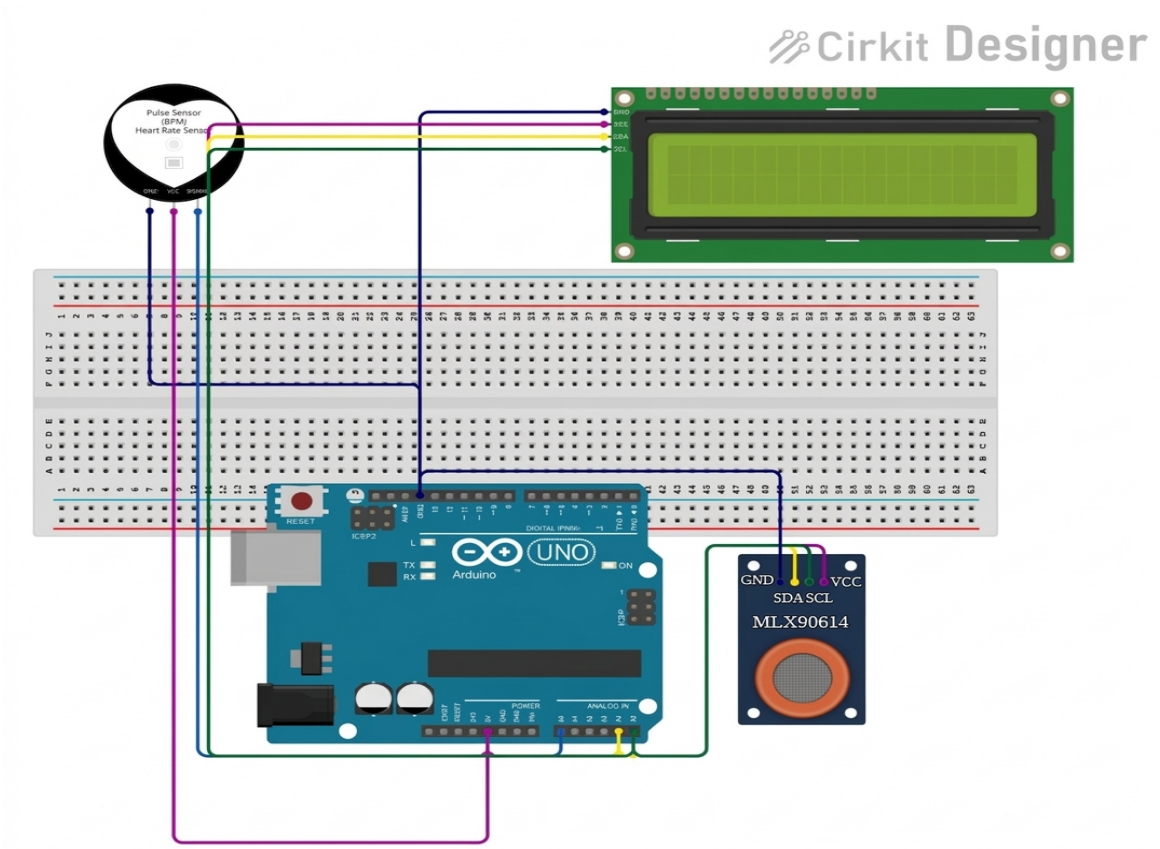

5.4 Power Considerations

The system is powered via USB (5V). All components operate at 5V logic compatible with Arduino Nano . Total current consumption is low, making it suitable for portable applications.

6.Software Design

6.1 Development Environment

- Language: C/C++
- IDE: Arduino IDE
- Libraries: Wire.h – LiquidCrystal_I2C.h - Adafruit_MLX90614.h

6.2 Software Architecture

The system uses a loop-based architecture where sensor readings are continuously processed, filtered, and displayed.

6.3 Flowchart

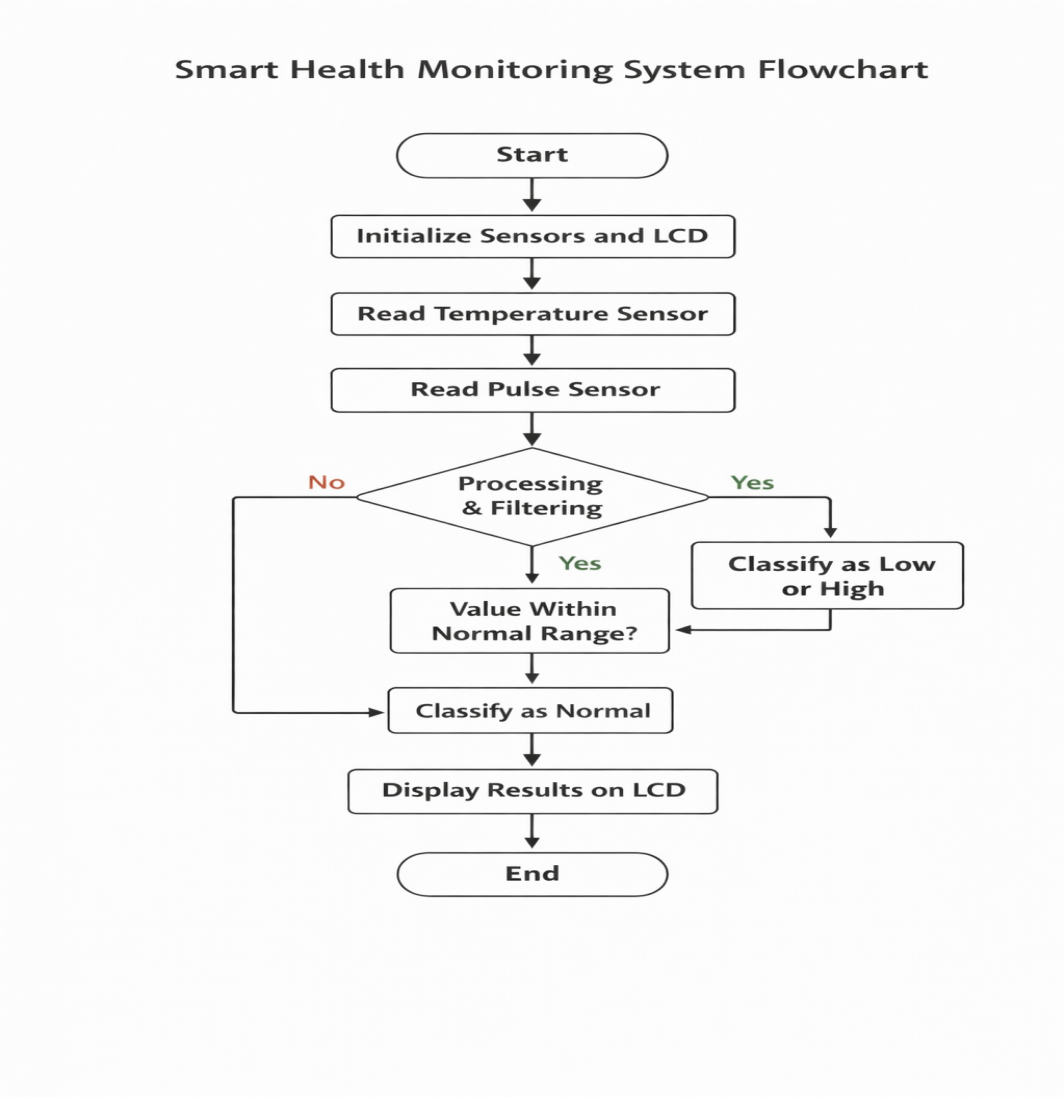

6.4 Algorithms

Signal smoothing (moving average filter)
Peak detection for BPM calculation
Threshold-based classification

7.System Integration

The system integrates hardware and software using I2C communication for the LCD and analog input for the pulse sensor. The MLX90614 communicates via I2C as well. The Arduino processes data in real-time with minimal delay.

8. Testing and Validation

8.1 Testing Strategy

The system was tested by observing real-time outputs and verifying sensor responses under different conditions.

8.2 Test Cases

Status (Pass/Fail)	Actual Output	Expected Output	Input / Condition	Test Case ID
Pass	Working	System displays data	Power On	TC-01
Pass	Working	BPM appears	Finger on sensor	TC-02

8.3 Hardware and Software Testing

Testing included checking wiring connections, serial monitor output, and debugging sensor readings.

9. Results and Discussion

The system successfully measures and displays temperature and heart rate. Some fluctuations were observed due to sensor noise, but filtering improved stability.

10. Challenges and Solutions

- CHALLENGE: Noisy readings .
- SOLUTION: Implemented smoothing filter .
- CHALLENGE: Delayed BPM detection .
- SOLUTION: Adjusted threshold and timing logic .

11. Conclusion

The project successfully achieved its objectives by developing a real-time health monitoring system using Arduino Nano. The system provides reliable measurements and displays them effectively.

12. Future Work

- Add wireless connectivity (Bluetooth/WiFi)
- Improve accuracy using advanced filtering
- Add mobile app integration

13. References

1. MLX90614 Datasheet
2. Arduino Official Documentation
3. Sensor Library Documentation